中国科技论文在线 http://www.paper.edu.cn

Dynamic Decoupling and Compensating Methods of Multi-Axis Force Sensors

Ke-Jun Xu and Cheng Li

***Abstract*—Dynamic decoupling and compensating methods of multi-axis force sensors are proposed to solve simultaneously the dynamic coupling between axes and the slow dynamic response which are the two key problems in dynamic characterizing of the multi-axis force sensors and improve their dynamic quality. Four types of dynamic decoupling and compensating networks are shown, the design equations and procedures are presented, and the parameters of the networks are determined using a method based on a functional link artificial neural network (FLANN). The dynamic decoupling and compensating results for a wrist force sensor have proved the methods to be correct and effective.**

***Index Terms*—Compensation, decoupling, functional link artificial neural network, multi-axis force sensor.**

I. Introduction

THE simultaneous detecting of complex force and torque components in three-dimensional space are increasingly needed in both research work and practical manufacture, and the multi-axis force and torque sensors are being developed rapidly. For example, we can cite the six-axis wrist force sensor for robot assembling and automated polishing [1], [2], the five-component strain gauge wind tunnel dynamometer for wind tunnel testing [3], the multi-axis measuring force platform for biomedical research and development [4], and so on. As these sensors are used in robot operation, dynamic testing and process control, their dynamic performance is required to be of high accuracy. However, the actual situations are not satisfactory for the dynamic coupling among various directions of multi-axis force and torque sensors because the elastic body of the sensor is an integer structure and the interaction of various channels can not be avoided completely. In addition, due to their small damped ratio and low natural frequency, the sensor dynamic response is slow, and the time to reach the steady state is long. Both dynamic coupling and slow dynamic response are two main factors affecting the dynamic performance of sensors. But the two key problems are not studied in depth and not resolved simultaneously so far. This paper proposes dynamic compensating and decoupling methods of multi-force sensors, presents four types of dynamic decoupling and compensating networks, gives the design procedures, and shows how to determine the order and parameters of the networks. The dynamic output signals of a wrist force sensor are decoupled and compensated simultaneously, and the results have proved the method to be correct and effective.

Manuscript received November 15 1998; revised April 9, 2000. This work was supported by the National Natural Science Foundation of China (Contracts 59675085 and 59985003) and the "863" Project (Contract 863-512-9805-06).

The authors are with the Institute of Automation, Hefei University of Technology, Hefei 230009, China (e-mail: xukejun@mail.hf.ah.cn).

Publisher Item Identifier S 0018-9456(00)07026-1.

II. Structures of Dynamic Decoupling and Compensating Networks

The different locations of the compensating components result in different structures of dynamic decoupling and compensating networks. In general, the compensating component is not put before the decoupling part; otherwise the design of the decoupling component may become very complex. The structure in which decoupling is accomplished first and then compensation is carried out is called a serial decoupling and compensating network. The structure in which decoupling and compensation are completed at the same time is called a parallel network. Taking a two-dimensional force sensor as an example, the structures of various networks are shown in Fig. 1(a)–(d). Fig. 1(a) shows the P parallel decoupling and compensating network (PPDCN), (b) is the P serial decoupling and compensating network (PSDCN), (c) shows the V parallel decoupling and compensating network (VPDCN), and (d) is the V serial decoupling and compensating network (VSDCN). In these figures, Y_i are the sensor's outputs, and L_i are the outputs of the decoupling and compensating network.

III. Design of Dynamic Decoupling and Compensating Networks

A. Design of PSDCN

The design procedure of PSDCN involves two steps. At first the decoupling component is designed, then the compensating component is done. The design goal of the decoupling component is to make zero the elements of the non-main diagonals in the matrix which is the product of the sensor transfer function matrix and the decoupling matrix. The design goal of the compensating component is to make the compensating matrix equal to the inverse of the product matrix obtained by multiplying the sensor transfer function matrix G and the decoupling matrix. For an n-dimensional sensor, the decoupling matrix D_{psd} and the compensating matrix D_{psc} in PSDCN are given by (1), respectively

$$D_{psd} = \begin{bmatrix} 1 & D_{12} & \cdots & D_{1n} \\ D_{21} & 1 & \cdots & D_{2n} \\ \vdots & & & \\ D_{n1} & D_{n2} & \cdots & 1 \end{bmatrix}$$

转载

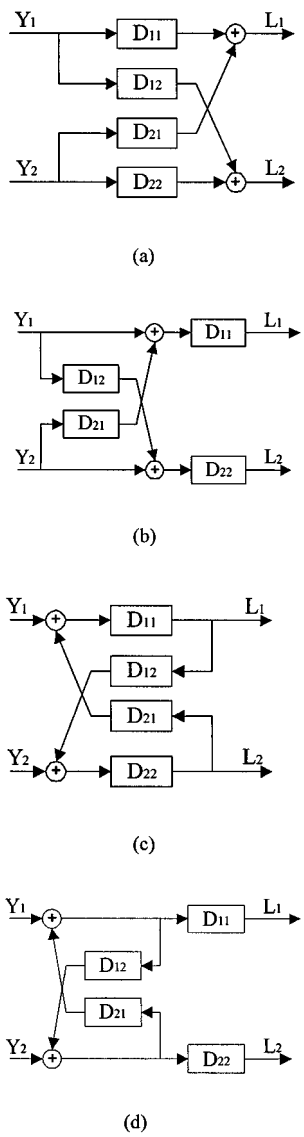

Fig. 1. Four types of network structures: (a) PPDCN, (b) PSDCN, (c) VPDCN, and (d) VSDCN.

$$D_{psc} = \begin{bmatrix} D_{11} & 1 & \cdots & 1 \\ 1 & D_{22} & \cdots & 1 \\ \vdots & & & \\ 1 & 1 & \cdots & D_{nn} \end{bmatrix}. \tag{1}$$

To decouple completely, we must have

$$G \cdot D_{psd} \cdot D_{psc} = I. \tag{2}$$

Therefore

$$D_{psd} \cdot D_{psc} = \begin{bmatrix} D_{11} & D_{12}D_{22} & \cdots & D_{1n}D_{nn} \\ D_{21}D_{11} & D_{22} & \cdots & D_{2n}D_{nn} \\ \vdots & & & \\ D_{n1}D_{11} & D_{n2}D_{22} & \cdots & D_{nn} \end{bmatrix} = \frac{1}{|G|}G^* \tag{3}$$

where $|G|$ is the determinant matrix of the sensor transfer function G, and G^* is the companion matrix of G.

By making the corresponding elements in (3) equal, the elements of D_{psd} and D_{psc} are resolved as follows:

$$D_{ii} = \frac{G_{ii}^*}{|G|} \quad D_{ij} = \frac{G_{ji}^*}{|G| \cdot D_{ij}} \quad (i = 1, 2, \cdots, n; j = 1, 2, \cdots, n; i \neq j). \tag{4}$$

B. Design of PPDCN

The design of PPDCN may be considered as a direct solution of the inverse matrix. Assuming that PPDCN is the inverse matrix of the sensor transfer function, the decoupling and compensating matrix D_{ppdc} is given by (5):

$$D_{ppdc} = \begin{bmatrix} D_{11} & D_{12} & \cdots & D_{1n} \\ D_{21} & D_{22} & \cdots & D_{2n} \\ \vdots & & & \\ D_{n1} & D_{n2} & \cdots & D_{nn} \end{bmatrix}. \tag{5}$$

If D_{ppdc} is equal to the inverse matrix of the sensor transfer function, the elements of D_{ppdc} can be calculated:

$$D_{ij} = \frac{G_{ji}^*}{|G|}, \qquad (i = 1, 2, \cdots, n; j = 1, 2, \cdots n;). \tag{6}$$

C. Design of VSDCN

The mathematical equations of VSDCN are given as

$$L_i = Y_i + \sum_{\substack{j=1 \\ j \neq 1}}^{N} D_{ij} L_j, \qquad (i = 1, 2, \cdots, n). \tag{7}$$

Then

$$Y_i = L_i - \sum_{\substack{j=1 \\ j \neq 1}}^{n} D_{ij} L_j, \qquad (i = 1, 2, \cdots, n). \tag{8}$$

Equation (7) can be written in a matrix form as

$$Y = LT. \tag{9}$$

Here, Y and L are row vectors; T is a matrix defined in (10)

$$T = \begin{bmatrix} 1 & -D_{12} & \cdots & -D_{1n} \\ -D_{21} & 1 & \cdots & -D_{2n} \\ \vdots & & & \vdots \\ -D_{n1} & -D_{n2} & \cdots & 1 \end{bmatrix}. \tag{10}$$

If T is regular, the decoupling matrix D_{vsd} of VSDCN is given by

$$D_{vsd} = T^{-1}. \tag{11}$$

To reach decoupling and compensation completely, the following equation must be satisfied:

$$G \cdot D_{vsd} \cdot Dvsc = I \tag{12}$$

where D_{vsc} is a compensating matrix.

Equation (12) yields

$$D_{vsd} \cdot D_{vsc} = G^{-1}. \tag{13}$$

Therefore

$$G = D_{vsc}^{-1} \cdot T = \begin{bmatrix} \frac{1}{D_{11}} & \frac{D_{12}}{D_{11}} & \cdots & -\frac{D_{1n}}{D_{11}} \\ -\frac{D_{21}}{D_{22}} & \frac{1}{D_{22}} & \cdots & -\frac{D_{2n}}{D_{22}} \\ \vdots & & & \\ -\frac{D_{n1}}{D_{nn}} & -\frac{D_{n2}}{D_{nn}} & \cdots & \frac{1}{D_{nn}} \end{bmatrix}. \quad (14)$$

The model of VSDCN can be obtained from solving (14)

$$D_{ii} = \frac{1}{G_{ii}}, \quad D_{ij} = -\frac{G_{ij}}{G_{ii}}, \quad (i = 1, 2, \cdots, n; j = 1, 2, \cdots, n; i \neq j). \quad (15)$$

D. Design of VPDCN

The mathematical equations of VPDCN are described by

$$L_i = D_{ii} \left(Y_i + \sum_{\substack{j=1 \\ j \neq 1}}^{n} D_{ij} L_j \right), \qquad (1, 2, \cdots, n). \quad (16)$$

From (16), we obtain

$$Y_i = \frac{L_i}{D_{ii}} - \sum_{\substack{j=1 \\ j \neq 1}}^{n} D_{ij} L_j, \qquad (i = 1, 2, \cdots, n). \quad (17)$$

Equation (17) can be written in a matrix form

$$Y = LT \quad (18)$$

where Y and L are row vectors, and T is an $n \times n$ matrix.

$$T = \begin{bmatrix} \frac{1}{D_{11}} & -D_{12} & \cdots & -D_{1n} \\ -D_{21} & \frac{1}{D_{22}} & \cdots & -D_{2n} \\ \vdots & & & \\ -D_{n1} & -D_{n2} & \cdots & \frac{1}{D_{nn}} \end{bmatrix}. \quad (19)$$

If T is regular, the D_{vpdc} of VPDCN is

$$D_{vpdc} = T^{-1}. \quad (20)$$

In order to achieve decoupling and compensation, we have

$$G \cdot D_{vpdc} = I. \quad (21)$$

Therefore

$$G = D_{vpdc}^{-1} = (T^{-1})^{-1} = T. \quad (22)$$

The model of VPDCN can be solved from (22)

$$D_{ii} = \frac{1}{G_{ii}}, \quad D_{ij} = -G_{ij} \quad (i = 1, 2, \cdots, n; j = 1, 2, \cdots, n; i \neq j). \quad (23)$$

E. Design of Decoupling and Compensating Networks for Non-Minimum Phase System

If the multi-axis force sensor is a nonminimum phase system, the above-mentioned method which designs the dynamic decoupling and compensating networks will result in an unstable state. Therefore, before the dynamic decoupling and compensating networks are designed, the dynamic compensating digital filters are designed for noncoupled channels. In the design of the dynamic compensating digital filter, the pole-zero offset method or system identification method can be adopted [5], [6]. The result matrix F of dynamic compensation for noncoupled channels is the following:

$$F = \begin{bmatrix} f_{11} g_{11} & 0 & \cdots & 0 \\ 0 & f_{22} g_{22} & \cdots & 0 \\ \vdots & & & \\ 0 & 0 & \cdots & f_{nn} g_{nn} \end{bmatrix} \quad (24)$$

where g_{ii} $(i = 1, 2, \cdots, n)$ is the transfer function for the ith channel of the sensor, and f_{ii} $(i = 1, 2, \cdots, n)$ is the transfer function of the dynamic compensating digital filter for the ith channel of the sensor.

In the design process of four types of dynamic decoupling and compensating networks, assuming that the product of the sensor transfer function and the matrix of decoupling and compensation is equal to F, the corresponding decoupling and compensating network is obtained. The computation procedure is similar to the previous section. The models of dynamic decoupling and compensating networks are as follows:

1) PSDCN

$$D_{ii} = \frac{f_{ii} \cdot G_{ii}^* G_{ii}}{|G|} \quad D_{ij} = \frac{G_{ji}^*}{|G| \cdot D_{jj}} \quad (i = 1, 2, \cdots, n; j = 1, 2, \cdots, n; i \neq j) \quad (25)$$

2) PPDCN

$$D_{ii} = \frac{f_{ii} \cdot G_{ii}^* G_{ii}}{|G|}, \quad D_{ij} = \frac{G_{ji}^* f_{ii} G_{ii}}{|G|} \quad (i = 1, 2, \cdots, n; j = 1, 2, \cdots, n; i \neq j) \quad (26)$$

3) VSDCN

$$D_{ii} = f_{ii}, \quad D_{ij} = -\frac{G_{ij}}{G_{ii}}, \quad (i = 1, 2, \cdots, n; j = 1, 2, \cdots, n; i \neq j) \quad (27)$$

4) VPDCN

$$D_{ii} = f_{ii}, \quad D_{ij} = \frac{G_{ij}}{f_{ii} G_{ii}}, \quad (i = 1, 2, \cdots, n; j = 1, 2, \cdots, n; i \neq j) \quad (28)$$

IV. Identification of Orders and Parameters for the Dynamic Decoupling and Compensating Network

We use a method based on a functional link artificial neural network (FLANN) to determine the orders and parameters of the dynamic decoupling and compensating network. Although the system identification method can also be used for computation,

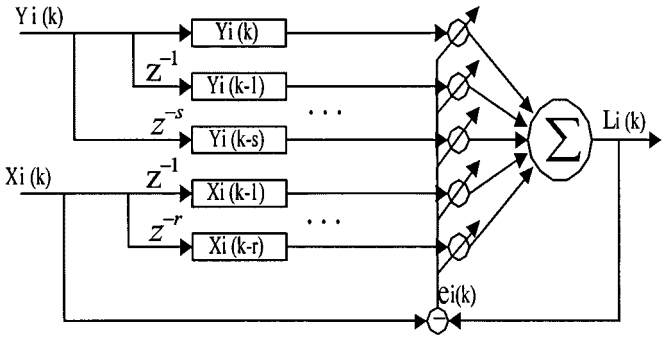

Fig. 2. Schematic of modeling by FLANN.

it sometimes yields too high model orders or makes the decoupling and compensating results divergent because of modeling error. The FLANN method overcomes those shortcomings.

By taking a careful look into the design of decoupling components in PSDCN, VSDCN, and VPDCN, it can be found that such design has nothing to do with the mixed output signal of the sensor, which includes noncoupled and coupled output signals. Therefore, the model of the decoupling component could be designed at first based on the input and output signals of the sensor under the no coupled condition. In the design process of the compensating component, the decoupling model is used for decoupling coupled signals, and then in accordance with the decoupled signals, the compensating components are designed. Thus the decoupling error can be brought into the design of compensating components, and corrected in the compensating components.

Designing PSDCN and VSDCN could utilize both the system identification method and the FLANN method. But in designing the VPDCN, only the FLANN method is adopted because VPDCN is a parallel structure with internal feedback, and modeling errors cannot be avoided. Designing the PPDCN is very complex, and the model of the compensating component for noncoupled channels is to be set up at first by using the input and output signals of the sensor under the no coupled condition. By adjusting the difference between the compensating result of the mixed output signal and the input signal, the model of the decoupling component is trained. Thus the compensating error can be taken into the design of the decoupling component, and corrected in the decoupling component.

The FLANN has been employed to estimate and correct the static nonlinearity of a pressure sensor [7]. Here, we use the FLANN to study the dynamic characteristic of a wrist force sensor, and utilize its excellent approximating ability to obtain the parameters of the dynamic decoupling and compensating network.

Suppose the input signals of the sensor are $X_i(k)$, and the output signals are $Y_i(k)$. By the functional expansion technique, the $X_i(k-1), \cdots, X_i(k-r), Y_i(k-1), \cdots, Y_i(k-s)$ are obtained according to Fig. 2, and used as the inputs of the FLANN. The k expresses the number of data, $k = 1, \cdots, N$. The inputs are weighted and summed, and the output $L_i(k)$ result. The difference between $L_i(k)$ and $X_i(k)$ is considered an error $e_i(k)$ to adjust the weights $W_i(k)$ of the FLANN. A schematic diagram of the FLANN for determining parameters is shown in Fig. 2. An equation describing the neural net algorithm can be written as

$$L_i(k) = \sum_{p=1}^{r} w(j)X_i(k-p) + \sum_{q=1}^{s} w(q+r+1)Y_i(k-q). \quad (29)$$

The error is

$$e_i(k) = X_i(k) - L_i(k). \quad (30)$$

The weight update equations are given by

$$\begin{aligned} w_i(p) &= w_i(p) + \alpha \cdot e_i(k)X_i(k-p) \\ w_i(q+r+1) &= w_i(q+r+1) + \alpha \cdot e_i(k)Y_i(k-q) \end{aligned} \quad (31)$$

where $L_i(k), Y_i(k), e_i(k)$, and $W_i(k)$ stand, respectively, for the desired output of the ith channel, estimating output, error, and the pth or the qth linking weight in the kth step of the FLANN. The α denotes the learning coefficient which is related to the stability and the rate of convergence. Usually α is to be about 0.1. In the training process, initial values of weights are chosen to be about 0.1. After the FLANN is trained many times, and when the average mean square error achieves a minimum value, the weights of the FLANN are kept as the parameters of dynamic decoupling and compensating networks.

V. Dynamic Decoupling and Compensating Results

A. Evaluating Measures

In order to evaluate the decoupling and compensating effects, two measures are proposed as the following:

1) The standard deviation

$$\sigma = \sqrt{\frac{(L_i - X_i)^2}{N-1}} \quad (32)$$

where

X_i input signals of the sensor;

L_i corresponding decoupled and compensated output signals;

N total number of data.

2) The relative error

$$e_r = \frac{(L_i - X_i)_{\max}}{|X_i|_{\max}} \times 100\%. \quad (33)$$

The smaller the values of the two evaluating measures, the better the dynamic decoupling and compensating results, and the higher the dynamic measuring accuracy of the sensor.

B. Results of Simulation

In order to examine the decoupling and compensating methods by simulation, a dynamic coupled system is constructed as shown in Fig. 3. In Fig. 3, X_1 and X_2 are the input signals of two channels, respectively, and Y_1 and Y_2 are the output signals. The transfer functions of the components in the system are

$$G_{11}(s) = \frac{25000000}{s^2 + 1000s + 25000000}$$
$$G_{12}(s) = \frac{8403500}{s^2 + 864s + 23040000}$$

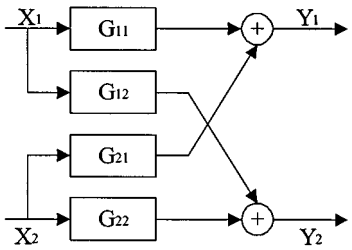

Fig. 3. Dynamic coupled system.

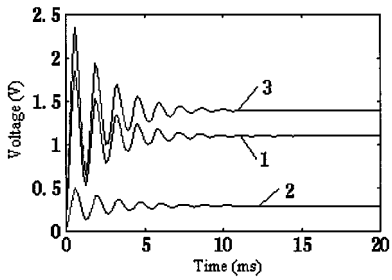

Fig. 4. Output signals of channel 1: 1) the output signal of the system under no coupled condition, 2) the coupled signal, and 3) the mixed output signal.

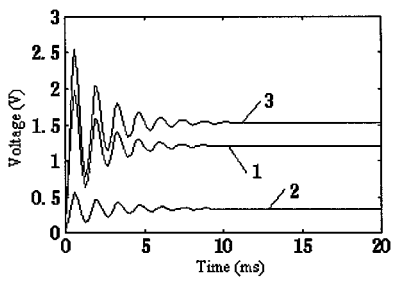

Fig. 5. Output signals of channel 2: 1) the output signal of the system under no coupled condition, 2) the coupled signal, and 3) the mixed output signal.

$$G_{21}(s) = \frac{8403500}{s^2 + 864s + 23040000}$$
$$G_{22}(s) = \frac{24010000}{s^2 + 1176s + 24010000}. \quad (34)$$

When X_1 and X_2 are the step input signals, the output signals of the system are shown in Figs. 4 and 5. In Figs. 4 and 5, curve 1 is the output signal of the system under the no coupled condition, curve 2 is the coupled signal caused by the other channel, curve 3 is the mixed output signal, i.e., the output signal under the coupled condition. The dynamic coupled ratio of channel 1 is 37.22%, and that of channel 2 is 37.90%. The output signals of the system differ considerably from the input signals because of the dynamic coupling and the slow dynamic response, resulting in a large dynamic measuring error of the system. The output signals of the system are processed by the PSDCN, PPDCN, VSDCN, and VPDCN. The parameters of the four types of networks are determined by the FLANN, and the results of dynamic decoupling and compensation are compared in Table I. The results of PSDCN and VPDCN are also shown in Figs. 6–9; and in these figures, curve 1 is the input signal, curve 2 is the output signal after being decoupled and compensated. Obviously, the output signals in the case of decoupling and compensating by the VSDCN or VPDCN are consistent with the input signals, and the values of their evaluating measures are zero, so the results are satisfactory. However, there are errors between the output signals of decoupling and compensating by the PSDCN

TABLE I
COMPARISONS OF THE DECOUPLING-COMPENSATING RESULTS OF FOUR TYPES OF NETWORKS FOR CHANNEL 1 AND CHANNEL 2

Error indexes	PSDCN	PPDCN	VSDCN	VPDCN
σ of channel 1	0.0008	0.000005	0	0
er of channel 1	0.21%	0.0029%	0	0
σ of channel 2	0.00037	0.000004	0	0
er of channel 2	0.17%	0.0023%	0	0

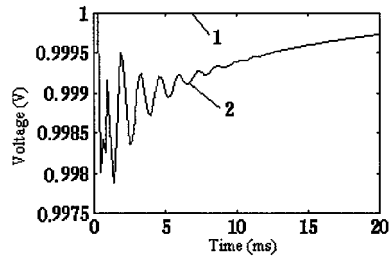

Fig. 6. Decoupling and compensating result of channel 1 by PSDCN: 1) the input signal, and 2) the output signal after decoupled and compensated.

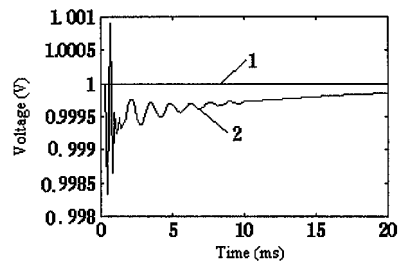

Fig. 7. Decoupling and compensating result of channel 2 by PSDCN: 1) the input signal, and 2) the output signal after decoupled and compensated.

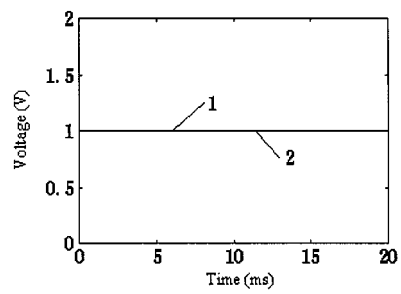

Fig. 8. Decoupling and compensating result of channel 1 by VPDCN: 1) the input signal and 2) the output signal after decoupled and compensated.

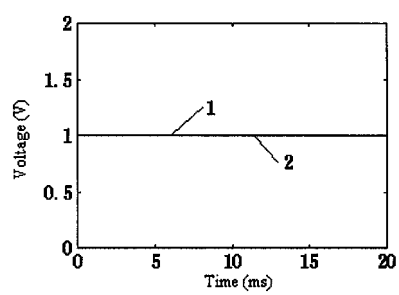

Fig. 9. Decoupling and compensating result of channel 2 by VPDCN: 1) the input signal and 2) the output signal after decoupled and compensated.

or PPDCN and the input signals, which is because these two networks use a low-order model instead of a higher-order model.

C. Dynamic Decoupling and Compensating Result of the Wrist Force Sensor

The dynamic calibrating experiments of the wrist force sensor are performed by the impulse response method which is easily done and works well. A multi-axis wrist force sensor is mounted on a testing platform for dynamic calibration. The impulse force is applied to the multi-axis wrist force sensor with a hammer. In the head of the hammer, a piezoelectric sensor is installed to transform the impulse force into an electric charge signal, which is amplified by a charge amplifier and sent to a computer-based data acquisition system. The multi-axis wrist force sensor outputs six-channel signals, of which three channels express force components of x, y, and z directions, and three channels express moment components of x, y, and z directions. These six-channel signals of the wrist force sensor are also collected by a data acquisition system. The waves of the sensor impulse response oscillate several times, and do not coincide with the input signal, which is attributed to the dynamic coupling and the slow dynamic response of the sensor; thus a large dynamic measuring error occurs. So we decouple and compensate the dynamic output signals of the wrist force sensor. As the sensor is a six-axis device, i.e., $n = 6$, the decoupling components of PSDCN and PPDCN are very complex in the case of high-order systems. For example, assuming that the model order of an element in the transfer function matrix is 3, the order of the decoupling and compensating model in PPDCN will be as high as 33, so the bad convergence and a large error may happen because of under modeling. In general, PSDCN and PPDCN can only be used for the dimension being less than 3.

When the dimension is larger than 3, only VSDCN and VPDCN can be used. The models of these networks do not vary with the number of variables, so they are not exposed to the problem of over-high order. For the wrist force sensor, we prefer VSDCN and VPDCN. To be brief, we only present the results of VSDCN. The decoupling and compensating results between direction Z and direction X are shown in Fig. 10(a) and (b). The decoupling and compensating results between direction Z and direction Y are shown in Fig. 11(a) and (b), where the orders of both decoupling and compensating models are 3; curve 1 describes the input signal of the sensor; curve 2 describes the decoupled and compensated result. After being dynamically decoupled and compensated, the output signal of the sensor approximates the input signal (impulse signal), and the dynamic measuring accuracy is greatly improved.

1) Direction Z and direction X
2) Direction Z and direction Y

The decoupling and compensating results of four types of networks for direction Z and direction X are compared in Table II. Comparisons of the decoupling and compensating results of four types of networks for direction Z and direction Y are shown in Table III. In both Tables II and III, the values of the evaluating measures in the results of PSDCN are larger than those of other networks, and considering the dimension is possibly larger than 3 in practical applications, we can conclude that the results of PSDCN are the worst and the results of VSDCN are the best.

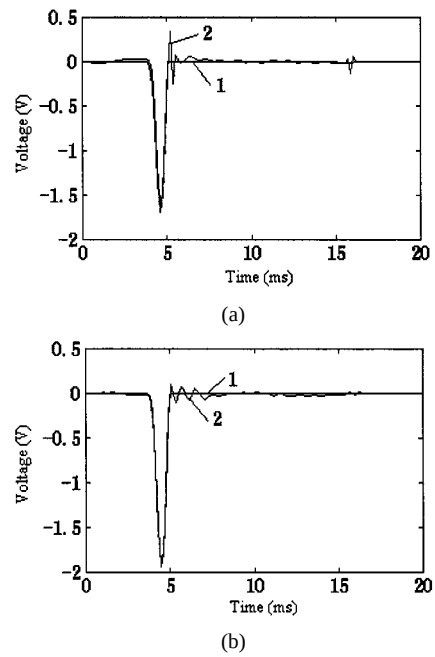

Fig. 10. (a) Decoupling-compensating result of direction Z: 1) the input signal and 2) the output signal after decoupled and compensated. (b) Decoupling-compensating result of direction X: 1) the input signal and 2) the output signal after decoupled and compensated.

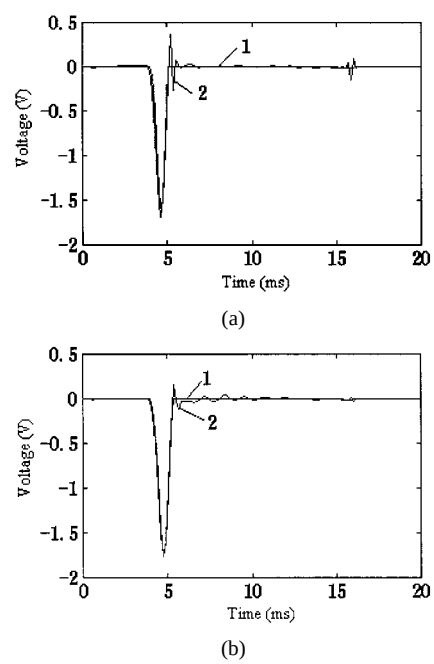

Fig. 11. (a) Decoupling-compensating result of direction Z: 1) the input signal and 2) the output signal after decoupled and compensated. (b) Decoupling-compensating result of direction Y: 1) the input signal and 2) the output signal after decoupled and compensated.

VI. Conclusions

Four types of decoupling and compensating networks are presented in this paper. Among them, VSDCN and VPDCN are easier to comprehend and interpret, compared to the PSDCN

中国科技论文在线 http://www.paper.edu.cn

TABLE II
COMPARISONS OF THE DECOUPLING-COMPENSATING RESULTS OF FOUR TYPES OF NETWORKS FOR DIRECTION Z AND DIRECTION X

Error indexes	PSDCN	PPDCN	VSDCN	VPDCN
σ in direction Z	0.0880	0.0567	0.0543	0.0668
e_r in channel Z	18.50%	19.35%	15.70%	14.25%
σ in direction X	0.0717	0.0276	0.0270	0.0538
e_r in direction X	19.71%	5.62%	5.53%	10.54%

TABLE III
COMPARISONS OF THE DECOUPLING-COMPENSATING RESULTS OF FOUR TYPES OF NETWORKS FOR DIRECTION Z AND DIRECTION Y

Error indexes	PSDCN	PPDCN	VSDCN	VPDCN
σ in direction Z	0.0731	0.0585	0.0586	0.0946
e_r in direction Z	18.91%	20.59%	21.60%	25.10%
σ in direction Y	0.0960	0.0449	0.0301	0.0479
e_r in direction Y	23.70%	13.37%	9.23%	13.10%

and PPDCN. They can be fully decoupled and compensated at the same time, at least in theory. From the structure point of view, the parallel structure is better than the serial one, because the decoupling and compensating are combined together, which makes the network clearer and more simplified.

The decoupling and compensating errors are mainly caused by the following.

1) There are modeling errors in the four types of networks.
2) The simplification of the model results in the errors in PSDCN and PPDCN.

The decoupling and compensating methods can also be applied to other multi-axis force sensors.

REFERENCES

[1] D. M. Perry, "Multi-axis force and torque sensing," *Sens. Rev.*, vol. 17, no. 2, pp. 117–120, 1997.

[2] L.-P. Chao and K.-T. Chen, "Shape optimal design and force sensitivity evaluation of six-axis force sensors," *Sens. Actuators A, Phys.*, vol. 63, pp. 105–112, 1997.

[3] M. Dubious, "Six-component stain-gge balances for large wind tunnels," *Exp. Mech.*, vol. 11, pp. 401–407, 1981.

[4] D. Diddens, D. Reynaerts, and H. Van Brussel, "Design of a ring-shaped three-axis micro force/torque sensor," *Sens. Actuators A, Phys.*, vol. 46–47, pp. 225–232, 1995.

[5] K. J. Xu and T. Tang, "A pole-zero offset method for sensor's dynamic compensation," *Chin. Sci. Bull.*, vol. 39, no. 16, pp. 1407–1408, 1994.

[6] K. J. Xu, Y. Zhang, and C. W. Zhang, "Investigation of dynamic compensation for wrist force sensor" (in Chinese), *ACTA Metrologica Sinica*, vol. 18, no. 2, pp. 116–121, 1997.

[7] J. C. Patra, G. Panda, and R. Baliarsingh, "Artificial neural network-based non-linearity estimation of pressure sensors," *IEEE Trans. Instrum. Meas.*, vol. 63, pp. 874–881, Dec. 1994.

Ke-Jun Xu was born in Zhengjiang, China, on December 3, 1956. He received the M.S. degree in electrical engineering from Hefei University of Technology, China, in 1986 and the Ph.D. degree in electrical engineering from China University of Mining and Technology, Xuzhou, in 1988.

In 1989, he joined the Institute of Automation, Hefei University of Technology, where he became a Professor in 1994. His research interests are in the area of the sensor technology and digital signal processing.

Cheng Li was born in Anshan, China, on March 2, 1972. He received the B.S. degree, the M.S. degree, and the Ph.D. degree in precision instruments from Hefei University of Technology, China, in 1993, 1996, and 1999, respectively.

Currently, he is a postdoctoral fellow at the Beijing Institute of Control Engineering, Beijing, China. His research interests include teleoperation, robotics system planning and control, and real-time system dynamic correction.